CHIORINO 1906

SIDEWALLS

TECHNICAL DATA SHEET

CODE ES693 **TYPE** **CV-T 10/50 W**

DESCRIPTION

Sidewalls with textile core fitted longitudinally.

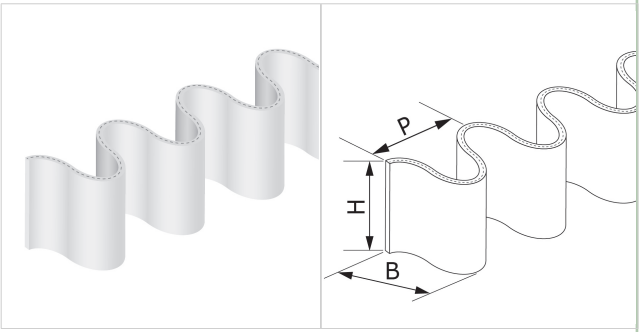

TECHNICAL SPECIFICATIONS

Material	Polyvinyl chloride (PVC)		
Colour	White		
Hardness	60 ±5 Sh.A		
B = Base	22	mm	0,87 *in.*
H = Height	50	mm	1,97 *in.*
P = Pitch	24	mm	0,94 *in.*
Thickness	1.7	mm	0,07 *in.*
Weight	112	gr/m	0.100 *oz/in.*
Minimum pulley diameters[1]			
■ longitudinal-conveying side	140	mm	5.5 *in.*
[1] Minimum pulley diameters referred to environment conditions of 20°C			
Temperature resistance [2] min.	-10	°C	14 *°F*
max	60	°C	140 *°F*
[2] Use with limit values may reduce its life			
Preformed or multiple roll length	20.0	m	65.6 *ft*

COMPLIANCES

REACH EC 1907/2006 Regulation and Amendments
FDA (Food and Drug Administration)

METHOD OF APPLICATION

- High frequency welding

NOTES

Issue: 22-01-2020 Last Update: 22-01-2020

DISCLAIMER
The information contained in this document describes the features of the CHIORINO product as tested in a laboratory environment at a temperature of +23 degrees °C at 50% relative humidity. It does not necessarily reflect the conditions of industrial use and it does not guarantee the product to be suitable for certain applications. The client remains liable for the proper selection and correct use of the CHIORINO product. CHIORINO cannot be held responsible should damages arise from the use of its products. Necessary alterations to this data can be made without prior notice.

CHIORINO S.p.A. - VIA S. AGATA, 9 - 13900 BIELLA - ITALIA - P.O.B. 460 - TEL. +39-015-8489.1 - FAX +39-015.8489161
chiorino@chiorino.com - www.chiorino.com